# NBC-M12MS/ 5,0-94B/R4AC US - Network cable

1409863

https://www.phoenixcontact.com/us/products/1409863

Please be informed that the data shown in this PDF document is generated from our online catalog. Please find the complete data in the user documentation. Our general terms of use for downloads are valid.

Network cable, Ethernet CAT5 (1 Gbps), 8-position halogen-free, shielded, Plug straight M12, coding: A / IP67, on Plug straight RJ45 / IP20, cable length: 5 m

## Commercial data

| | |
|---|---|
| Item number | 1409863 |
| Packing unit | 1 pc |
| Minimum order quantity | 1 pc |
| Sales key | BF15 |
| Product key | BF1IHB |
| GTIN | 4046356993036 |
| Weight per piece (including packing) | 260.8 g |
| Weight per piece (excluding packing) | 260.8 g |
| Customs tariff number | 85444290 |
| Country of origin | US |

# Technical data

## Product properties

| | |
|---|---|
| Product type | Data cable preassembled |
| Sensor type | Ethernet |
| Number of positions | 8 |
| Application | Standard, U.S. cables |
| Shielded | yes |
| Coding | A |

## Interfaces

| | |
|---|---|
| Bus system | Ethernet |
| Signal type/category | Ethernet CAT5, 1 Gbps |

## Signaling

| | |
|---|---|
| Status display | No |
| Status display present | No |

## Electrical properties

| | |
|---|---|
| Nominal voltage $U_N$ | 48 V AC |
| | 60 V DC |
| Nominal current $I_N$ | 1 A |
| Transmission medium | Copper |
| Transmission characteristics (category) | CAT5 (IEC 11801:2002) |

## Connector

### Connection 1

| | |
|---|---|
| Type | Plug straight M12 / IP67 |
| Coding type | A (Standard) |
| Material | CuSn (Contact) |
| | Ni/Au (Contact surface) |
| | PA (Contact carriers) |
| | TPU, hardly inflammable, self-extinguishing (Grip) |
| | Zinc die-cast, nickel-plated (Screw connection) |
| Degree of protection | IP67 |

### Connection 2

| | |
|---|---|
| Type | Plug straight RJ45 / IP20 |
| Material | CuSn (Contact) |
| | Ni/Au (Contact surface) |
| | PA (Contact carriers) |
| | PA (Housing) |
| Degree of protection | IP20 |

## Cable/line

| | |
|---|---|
| Cable length | 5 m |

Ethernet flexible CAT5, 4-pair [94B]

| | |
|---|---|
| Dimensional drawing | |
| Cable weight | 47 kg/km |
| UL AWM Style | 20963 (80°C/30 V) |
| Number of positions | 8 |
| Shielded | yes |
| Cable type | Ethernet flexible CAT5, 4-pair [94B] |
| Conductor structure | 4x2xAWG26/7, SF/UTP |
| Signal runtime | 5.3 ns/m |
| Conductor structure signal line | 7x 0.16 mm |
| AWG signal line | 26 |
| Conductor cross section | 4x 2x 0.14 mm² |
| Wire diameter incl. insulation | 0.96 mm |
| External cable diameter | 6.4 mm ±0.2 mm |
| Outer sheath, material | PUR |
| External sheath, color | water blue RAL 5021 |
| Conductor material | Bare Cu litz wires |
| Material wire insulation | Foamed PE |
| Single wire, color | white/blue-blue, white/orange-orange, white/green-green, white/brown-brown |
| Thickness, outer sheath | 1.05 mm |
| Twisted pairs | 2 cores to the pair |
| Overall twist | 4 pairs for core |
| Optical shield covering | 70 % |
| Insulation resistance | ≥ 5 GΩ*km |
| Coupling resistance | ≤ 100.00 mΩ/m (at 10 MHz) |
| Loop resistance | ≤ 290.00 Ω/km |
| Wave impedance | 100 Ω ±5 Ω (at 100 MHz) |
| Cable capacity | 48 nF/km (at 1 kHz) |
| Nominal voltage, cable | ≤ 100 V |
| Test voltage Core/Core | 700 V (50 Hz, 1 min.) |
| Test voltage Core/Shield | 700 V (50 Hz, 1 min.) |
| Minimum bending radius, fixed installation | 4 x D |
| Minimum bending radius, flexible installation | 8 x D |

| | |
|---|---|
| Smallest bending radius, fixed installation | 26 mm |
| Smallest bending radius, movable installation | 52 mm |
| Tensile strength | ≤ 100 N |
| Near end crosstalk attenuation (NEXT) | 71.3 dB (with 1 MHz) |
| | 62.3 dB (at 4 MHz) |
| | 56.3 dB (at 10 MHz) |
| | 53.2 dB (at 16 MHz) |
| | 51.8 dB (at 20 MHz) |
| | 48.9 dB (at 31.25 MHz) |
| | 44.4 dB (at 62.5 MHz) |
| | 41.3 dB (at 100 MHz) |
| Power-summated near end crosstalk attenuation (PSNEXT) | 62.3 dB (with 1 MHz) |
| | 53.3 dB (at 4 MHz) |
| | 47.3 dB (at 10 MHz) |
| | 44.2 dB (at 16 MHz) |
| | 42.8 dB (at 20 MHz) |
| | 39.9 dB (at 31.25 MHz) |
| | 35.4 dB (at 62.5 MHz) |
| | 32.3 dB (at 100 MHz) |
| Return attenuation (RL) | 23 dB (at 4 MHz) |
| | 24.1 dB (at 8 MHz) |
| | 25 dB (at 10 MHz) |
| | 25 dB (at 16 MHz) |
| | 25 dB (at 20 MHz) |
| | 23.6 dB (at 31.25 MHz) |
| | 21.5 dB (at 62.5 MHz) |
| | 20.1 dB (at 100 MHz) |
| Shield attenuation | 3.2 dB (with 1 MHz) |
| | 6 dB (at 4 MHz) |
| | 9.5 dB (at 10 MHz) |
| | 12.1 dB (at 16 MHz) |
| | 13.6 dB (at 20 MHz) |
| | 17.1 dB (at 31.25 MHz) |
| | 24.8 dB (at 62.5 MHz) |
| | 32 dB (at 100 MHz) |
| Halogen-free | according to IEC 60754-1 |
| Flame resistance | according to IEC 60332-1-2 |
| Resistance to oil | in accordance with EN 60811-2-1 |
| Ambient temperature (operation) | -40 °C ... 80 °C (cable, fixed installation) |
| | -20 °C ... 80 °C (Cable, flexible installation) |
| Ambient temperature (installation) | -20 °C ... 80 °C |

## Environmental and real-life conditions

Ambient conditions

| | |
|---|---|
| Degree of protection | IP65 (M12 connector) |
| | IP67 (M12 connector) |
| | IP20 (RJ45 connector) |
| | IP67/IP20 |
| Ambient temperature (operation) | -25 °C ... 85 °C (M12 connector) |
| | -25 °C ... 60 °C (RJ45 connector) |

## Standards and regulations

M12

| | |
|---|---|
| Standard designation | M12 connector |
| Standards/specifications | IEC 61076-2-101 |

## Drawings

Circuit diagram

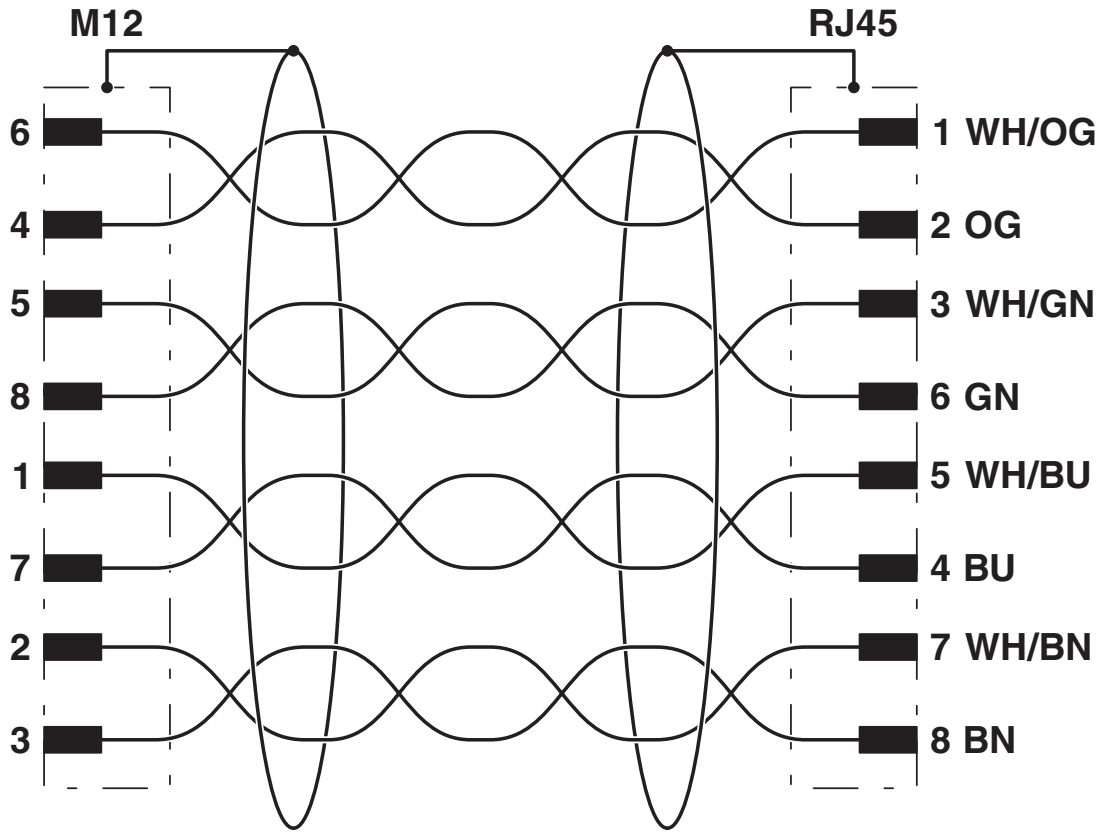

Schematic diagram

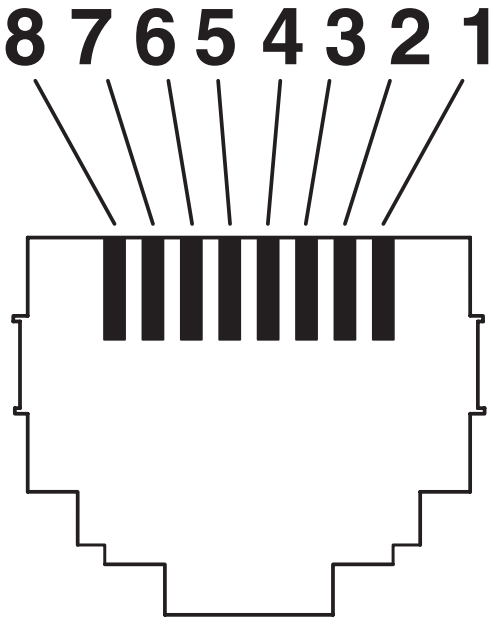


Connector pin assignment plug RJ45

Dimensional drawing

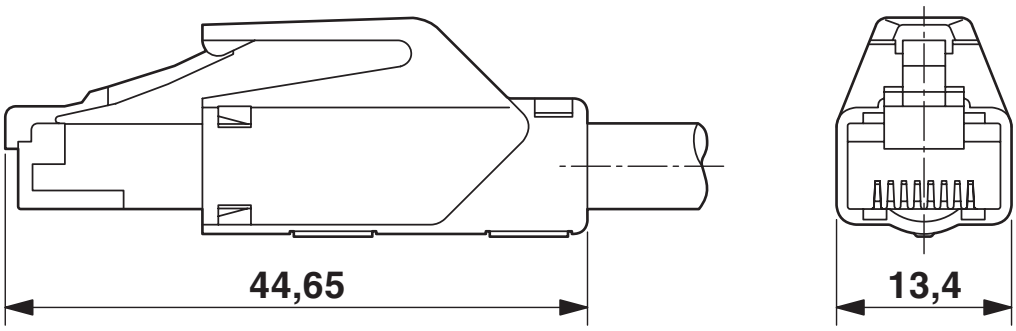


RJ45 connector, IP20

Dimensional drawing

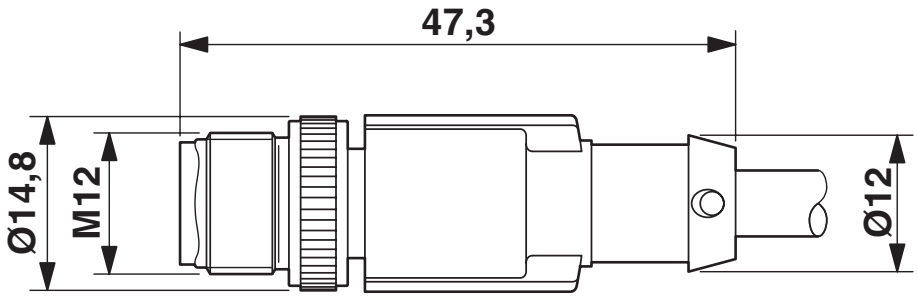


Plug, M12 x 1, straight, shielded

Schematic diagram

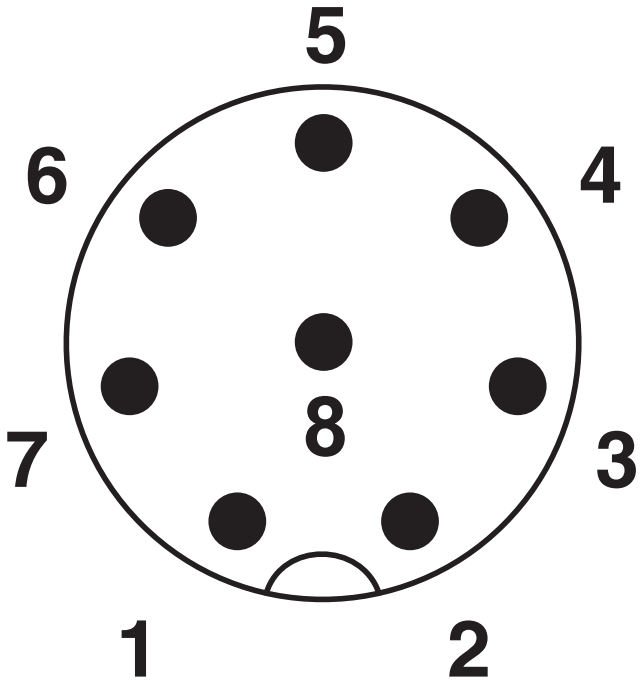


Pin assignment M12 plug, 8-pos., A-coded, view plug side

## Approvals

To download certificates, visit the product detail page: https://www.phoenixcontact.com/us/products/1409863

**UL Listed**
Approval ID: FILE E 335024

| | Nominal voltage $U_N$ | Nominal current $I_N$ | Cross section AWG | Cross section $mm^2$ |
|---|---|---|---|---|
| | 30 V | 0.5 A | - | - |

**EAC-RoHS**
Approval ID: RU D-DE.HB35.B.00387

## Classifications

### ECLASS

| | |
|---|---|
| ECLASS-11.0 | 27060307 |
| ECLASS-12.0 | 27060307 |
| ECLASS-13.0 | 27060307 |

### ETIM

| | |
|---|---|
| ETIM 8.0 | EC001855 |

### UNSPSC

| | |
|---|---|
| UNSPSC 21.0 | 26121600 |

Phoenix Contact 2024 © - all rights reserved
https://www.phoenixcontact.com

Phoenix Contact USA
586 Fulling Mill Road
Middletown, PA 17057, United States
(+717) 944-1300
info@phoenixcon.com